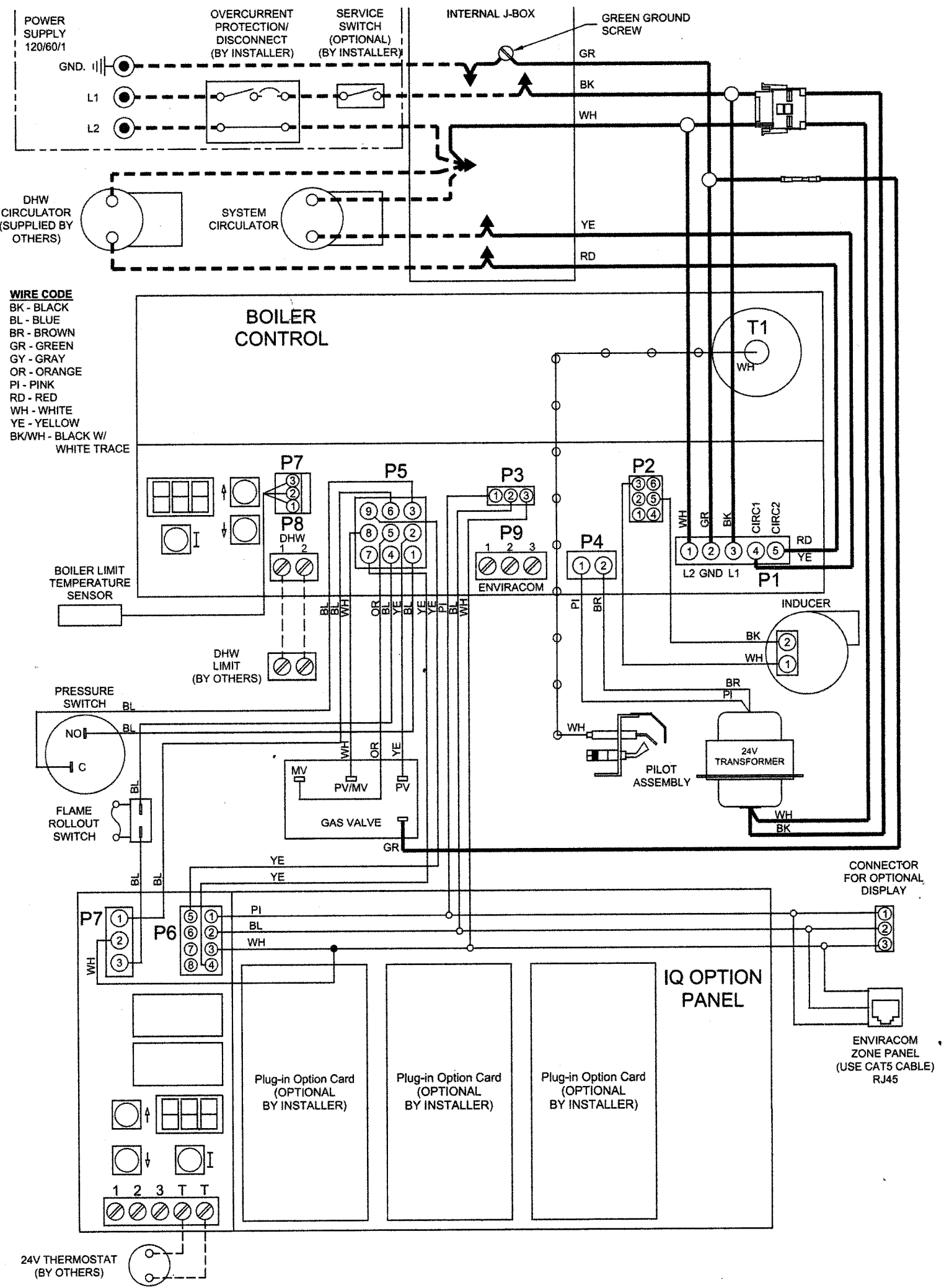
POWER SUPPLY 120/60/1
GND.
L1
L2
OVERCURRENT PROTECTION/ DISCONNECT (BY INSTALLER)
SERVICE SWITCH (OPTIONAL) (BY INSTALLER)
INTERNAL J-BOX
GREEN GROUND SCREW
GR
BK
WH
YE
RD
DHW CIRCULATOR (SUPPLIED BY OTHERS)
SYSTEM CIRCULATOR
WIRE CODE
BK - BLACK
BL - BLUE
BR - BROWN
GR - GREEN
GY - GRAY
OR - ORANGE
PI - PINK
RD - RED
WH - WHITE
YE - YELLOW
BK/WH - BLACK W/ WHITE TRACE
BOILER CONTROL
T1
P7
P8
DHW
P5
P3
P9
ENVIRACOM
P4
P2
CIRC1
CIRC2
L2 GND L1
P1
BOILER LIMIT TEMPERATURE SENSOR
DHW LIMIT (BY OTHERS)
INDUCER
PRESSURE SWITCH
NO
C
FLAME ROLLOUT SWITCH
MV
PV/MV
PV
GAS VALVE
PILOT ASSEMBLY
24V TRANSFORMER
CONNECTOR FOR OPTIONAL DISPLAY
P6
IQ OPTION PANEL
Plug-in Option Card (OPTIONAL BY INSTALLER)
Plug-in Option Card (OPTIONAL BY INSTALLER)
Plug-in Option Card (OPTIONAL BY INSTALLER)
ENVIRACOM ZONE PANEL (USE CAT5 CABLE) RJ45
24V THERMOSTAT (BY OTHERS)